Series 430
Pneumatic Indicating Controllers for Pressure Type 3430
Controller Station Type 3432
Transmitter Module Type 3435

Application

Pressure controller for process engineering and industrial applications for liquids, gases and vapors · Set point ranges from 0 to 1.6 bar and 0 to 40 bar

The indicating controllers measure the medium pressure directly, compare the measured value to the set point and produce a pneumatic control signal of 0.2 to 1 bar (3 to 15 psi). The required supply pressure is 1.4 bar (20 psi) or an operating air pressure of 2.0 to 12 bar (30 to 180 psi).

The devices consist of a controller station, a controller module with the desired control mode and a transmitter module corresponding to the pressure set point.

Special features

- Controller and control valve form a unit to directly measure the pressure to be controlled that is easy to service and reasonably priced
- Set point, actual value, system deviation and signal pressure are visible at a glance; all required adjusters and switches can be operated on the front panel
- Can be equipped with P, PI, PID or PD controller modules and additional modules for special control tasks
- Housing suitable for wall mounting, pipe mounting and panel mounting (front frame 192 x 228 mm), optionally with lockable door of transparent plastic (IP 65)

Versions

Type 3430 Indicating Controller for Pressure consisting of a Type 3432 Controller Station, a Type 3433 or Type 3434 Controller Module with the desired control mode, and a Type 3435 Transmitter Module

Controller station for application as:

Fixed set point controller (Figs. 1 and 2) · With bourdon tube measuring element for set point ranges between 0 to 1.6 bar and 0 to 40 bar

Follower controller · Same as fixed set point controller, but with additional input for external reference variable w_{ext} = 0.2 to 1 bar, 3 to 15 psi or 4 (0) to 20 mA · Without set point adjuster

Fixed set point and follower controller · Combination of fixed set point and follower controller, with w_{int}/w_{ext} selector switch to change between internal and external reference variable

Can optionally be equipped with 1 or 2 adjustable inductive limit switches and/or supply pressure regulator for operating air pressures of 2.0 to 12 bar

Controller station with i/p converter and limit switches in type of protection EEx ia IIC available

See page 3 for details on controller stations and modules.

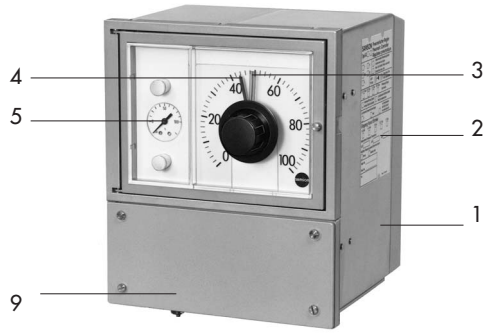

Fig. 1 · Fixed set point controller for pressure with Type 3432-01 Controller Station

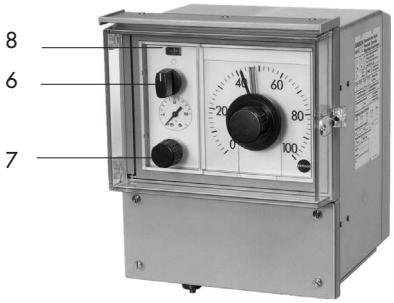

Fig. 2 · Fixed set point controller for pressure with Type 3432-02 Controller Station and lockable door

1 Controller station
2 Nameplate
3 Set point adjuster with set point display (w)
4 Controlled variable display (x)
5 Signal pressure display (y)
6 Manual/automatic switch
7 Manual adjuster
8 Differential pressure display for smooth manual/automatic changeover
9 Pressure connection

Ordering text

Pneumatic Indicating Controller for Pressure with Type 3432-...
Controller Station and Type 3435 Transmitter Module
Measuring range 0 to 1.6/2.5/4.0/6.0/10/16/25/40 bar
Output 0.2 to 1 bar/3 to 15 psi
Input w_{ext} for follower controllers 0.2 to 1 bar/3 to 15 psi/4 to 20 mA/0 to 20 mA
Optionally, with lockable door/with 1 or 2 inductive limit switches/with supply pressure regulator
With Type 3437-... Additional Module (only with Type 3433)

Principle of operation (see Figs. 3 and 4)

The Series 430 Pneumatic Controllers with their modular design can be used in all kinds of automation applications.

The pressure controllers consist of the basic unit – a Type 3432 Controller Station – including a Type 3433 or Type 3434 Controller Module with the desired control mode and a Type 3435 Transmitter Module.

The medium pressure p is applied to the transmitter module and produces a deflection on the bourdon tube measuring system (2.1). The deflection is converted into a controlled variable signal (x) that is proportional to the pressure p. The signal is fed to the bellows measuring system of the controlled variable display (1.3) and the controller module (3).

The controller station (fixed set point controller) shown in Fig. 3 consists of scale (1.2), controlled variable display (1.3), set point adjuster (1.4), and plug-in connections for a controller module (3). These pneumatic connections are self-sealing when the module is unplugged. The controlled variable signal x produces a deflection on the bellows measuring system of the controlled variable display (1.3) which is transmitted to the pointer over a gear mechanism. The set point (reference variable w) can be adjusted on a scale at the controller front. The position of the set point adjuster is transmitted to the set point transmitter (1.4) over a gear mechanism. This pneumatic servo system (2.2) converts the adjusted set point into a pneumatic set point signal (w), which is fed to the controller module. The controller module compares the controlled variable signal and the set point signal (x and w) and produces an output signal y_A depending on the system deviation and the adjusted control parameters. The output signal is connected to the output signal display (1.5) and the output y.

The controller station shown in Fig. 4 largely corresponds to the version shown in Fig. 3. However, the station additionally contains a manual/automatic switch (1.6), a manual adjuster (1.7) and a differential pressure display (1.8). When the switch is in position AUTOMATIC, the output signal display (1.5) and output y are connected to the automatic output signal y_A. When the switch is in position MANUAL, the output signal display and output y are connected to the manual output signal y_H set at the adjuster. Smooth changeover from manual to automatic operation is possible when the differential pressure display indicates that y_A and y_H are identical.

The follower controllers not shown here have an additional pneumatic or electric input for the external reference variable w_{ext} (at input w_{ext} = 4 (0) to 20 mA with integrated i/p converter). Refer to Data Sheet T 7045 EN for details on the i/p converter.

The controller stations can be equipped with suitable controller modules, e.g. with Type 3434 for common P or PI pressure control, with Type 3433 for P, PI, PID and PD control, as well as with additional modules for special control tasks. Refer to Data Sheets T 7040 EN and T 7041 EN for details on the controller modules.

The controller stations can optionally be equipped with 1 or 2 inductive limit switches adjustable on the scale.

Optionally, the stations are also available with a supply pressure regulator (1.9, see Fig. 4.1), enabling the stations to be used for operating air pressures from 2 to 12 bar. The additional supply pressure regulator controls and reduces the operating air pressure (p_B) to the required supply pressure (p_Z) of 1.4 bar or 20 psi. The regulator's principle of operation corresponds to Type 3708-5003 described in Data Sheet T 8545 EN.

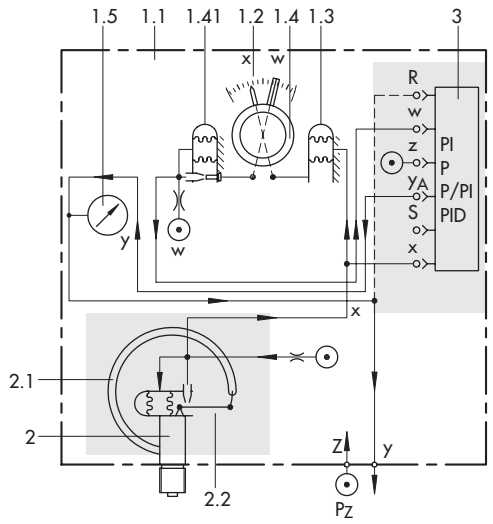

Fig. 3 · Fixed set point controller for pressure, version with Type 3432-01 Controller Station, functional diagram

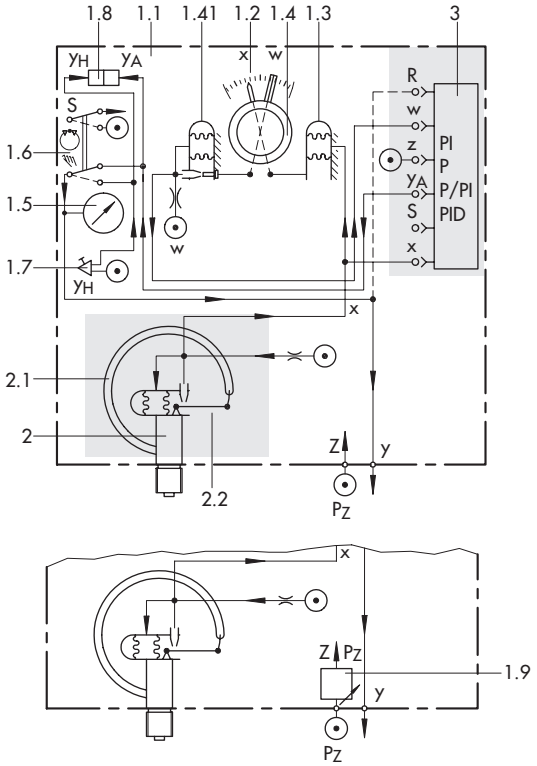

Fig. 4 · Fixed set point controller for pressure, version with Type 3432-02 Controller Station, functional diagram

Fig. 4.1 · Version with supply pressure regulator (1.9)

1 Controller station
1.1 Housing with door
1.2 Scale
1.3 Controlled variable display with pointer, gear mechanism and bellows measuring system
1.4 Set point adjuster with pointer, gear mechanism and set point transmitter (1.41); follower controllers: set point display only
1.5 Output signal display
1.6 Manual/automatic switch
1.7 Manual adjuster
1.8 Differential pressure display for smooth manual/auto changeover
1.9 Supply pressure regulator
2 Transmitter module for pressure
2.1 Bourdon tube
2.2 Pneumatic servo-control system
3 Controller module

Table 1 · Technical data

Type 3435 Transmitter Module										
Measuring range (set point) bar	0 to 1.6 · 0 to 2.5 · 0 to 4.0 · 0 to 6.0 · 0 to 10 · 0 to 16 · 0 to 25 · 0 to 40									
Overloadable up to	1.25 times the upper measuring range value									
Burstproof up to	Twice the upper measuring range value (max. 63 bar at 0 to 40 bar)									
Characteristic	Deviation from terminal-based conformity: ≤ 0.3 % with fixed set point control Hysteresis: ≤ 0.5 % · Dead band: ≤ 0.1 %									
Effects in %	Ambient temperature: ≤ 0.04 %/°C · Supply air: ≤ 0.25 %/0.1 bar · Overload to admissible value: < 1 %									
Max. process fluid temperature	60 °C									
Type 3432 Controller Station										
Controlled variable display	Measuring range 0.2 to 1.0 bar (3 to 15 psi) · Accuracy class 1.6 · Scale length 212 mm									
Set point adjustment [1]	Output 0.2 to 1.0 bar (3 to 15 psi) · Scale length 212 mm · Accuracy class 1.6									
Manual adjuster	Output 0.2 to 1.0 bar (3 to 15 psi) · Max. 0.02 to 1.35 bar · Max. air delivery > 1.5 m_n^3/h									
Limit switches	1 or 2 SC-3,5-NO-YE proximity switches acc. to DIN EN 60947-5-6, Ex II 2G EEx ia IIC T6									
Input w_{ext} in follower controllers	0.2 bar to 1 bar · 3 to 15 psi · 4 (0) to 20 mA									
i/p converter for w_{ext} [2]	Input 4 (0) to 20 mA (R_i = 200 Ω)									
Can be equipped with ...										
Controller Module [3]	**3434-1**	**3434-2**	**3433-1**	**3433-2**	**3433-3**	**3433-4**	**3433-5**	**3433-6**	**3433-9**	
Control mode	P	PI	P	PI [4]	PID [4]	PD	P/PI	PD/PID	P [5]	
Prop.-action coef. K_p	1 to 20		0.2 to 20 (0.4 to 40 on request)							
Reset time T_n	–	0.05 to 20 min	0.03 to 50 min							
Derivative-action time T_V	–	–	0.01 to 10 min · Derivative-action gain x ≈10							
Additional module (optional) [3]	–		**3437-1** Signal Limiter		**3437-2** Mode Changeover		**3437-3** Manual/automatic Transfer			
Output	0.2 to 1 bar (3 to 15 psi) · Max. 0.02 to 1.35 bar									
Supply Standard version	Supply pressure 1.4 ± 0.1 bar (20 ± 1.5 psi) · Air consumption < 0.6 m_n^3/h									
With supply press. regulator	Operating air 2.0 to 12 bar (30 to 180 psi) · Air consumption < 0.75 m_n^3/h									
With i/p converters	w_{ext} +0.13 m_n^3/h									
Air quality acc. to ISO 8573-1	Max. particle size and density: Class 3 · Oil content: Class 2 · Pressure dew point: Class 3 or at least 10 K below the lowest ambient temperature to be expected									
Perm. ambient temperature	–20 °C to +60 °C (–40 °C to +60 °C on request)									
Degree of protection	IP 40 · Front panel with door: IP 65									
Overall weight, approx.	6 kg									
Materials										
Housing	Die-cast aluminum, plastic coated									
Bourdon tube	Stainless steel (1.4571)									

[1] Version with follower controller: only set point display with 212 mm scale · [2] For details see T 7045 EN · [3] For details see T 7040 EN and T 7041 EN
[4] Optionally with feedback limitation · [5] With set-point-dependent operating point

Table 2 · Controller station versions

Controller Station Type		3432-...					
		01	02	03	04	05	06
Fixed set point control		•	•				
Follow-up control				•	•		
Fixed set point + follow-up control						•	•
Can be equipped with ...							
Set point adjuster		•	•			•	•
Set point display		•	•	•	•	•	•
Controlled var.+output sign. display		•	•	•	•	•	•
Manual/automatic switch			•		•		•
Manual adjuster+diff. press. display			•		•		•
Selector switch w_{int}/w_{ext}						•	•
Transmitter module		•	•	•	•	•	•
Controller Module	Type 3433-...[1]	•	•	•	•	•	•
	Type 3434-...	•	•	•	•	•	•
Input w_{ext}	0.2 to 1 bar			•	•	•	•
	4 (0) to 20 mA			•	•	•	•
i/p converter for w_{ext}				•	•	•	•
Can additionally be equipped with ...							
1 or 2 inductive limit switches		•	•	•	•	•	•
Type 3708-5003 Supply Press. Reg.		•	•	•	•	•	•
Door IP 65, conductive coating		•	•	•	•	•	•

[1] Optionally with additional module

Temperature decoupling · Type 3435 Transmitter Module

On using steam as the process medium, a U-shaped siphon must be used, filled with water prior to start-up, to decouple the temperature.

In case of liquids or gases over 60 °C, a U-shaped siphon or correspondingly long connection line should be used to decouple the temperature.

A pressure transmitting sealing element can also be attached to the Type 3435 Transmitter Module for temperature decoupling.

Pressure transmitting sealing element with process fluid connection

- Threaded hole G ½, PN 100, internal diaphragm, screwed version
- DIN flange, DN 50, PN 40/PN 63/PN 100, flush diaphragm
- Process fluid connection and separating diaphragm: Material 1.4571
- Connection line length: 2 m
- Perm. temperature at separating diaphragm: –20 to + 150 °C (–90 to +400 °C on request, depending on filling liquid)

Further versions with pressure transmitting sealing elements on request

Installation and connections

Possible mounting positions (see Fig. 6):

Pipe mounting · With fastening element and clamp for attachment to horizontal and vertical 2″ pipes · Order no. 1400-6302

Wall mounting · With three brackets for attachment to a wall Order no. 1400-6301

Panel mounting · With four C DIN 43835 fastening elements for panel mounting · Order no. 1400-6300

Mounting location · Controller station mounted in upright position

Air connections (output and supply) · Tapped holes ISO 228/1-G ⅛

Process fluid connection · Connection nipple ISO 228/1- G ½, DIN 16288 gasket

Electrical connection · Terminals for 0.5 to 1.5 mm² wires

Electrical connection

When additionally equipped with i/p converter for w_{ext} and/or inductive limit switches

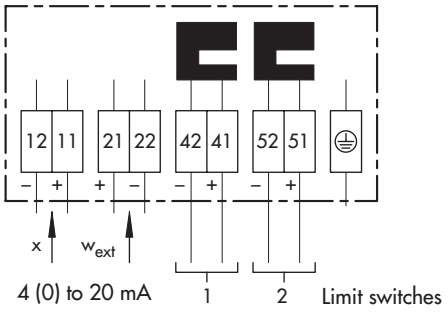

Connect suitable switching amplifiers into the output circuit to operate inductive limit switches.

Fig. 5 · Electrical connection

Dimensions in mm

Cut-out for **panel mounting** 188^{+1} x 255^{+1} mm

Distance between center lines with door approx. 235 mm

Close-to-close arrangement in rows (without door) according to IEC 61554

Pipe mounting

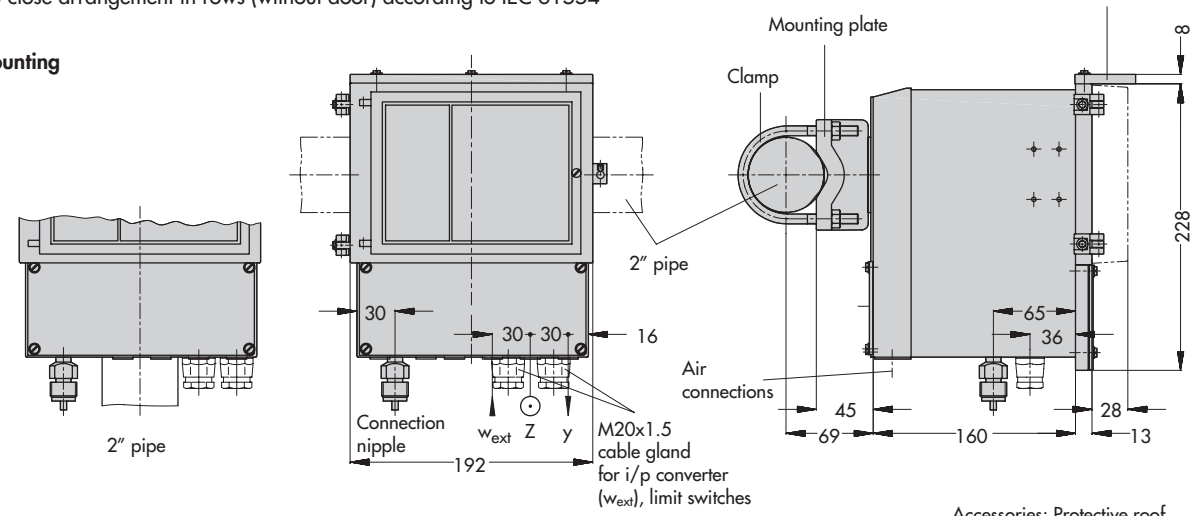

Wall mounting

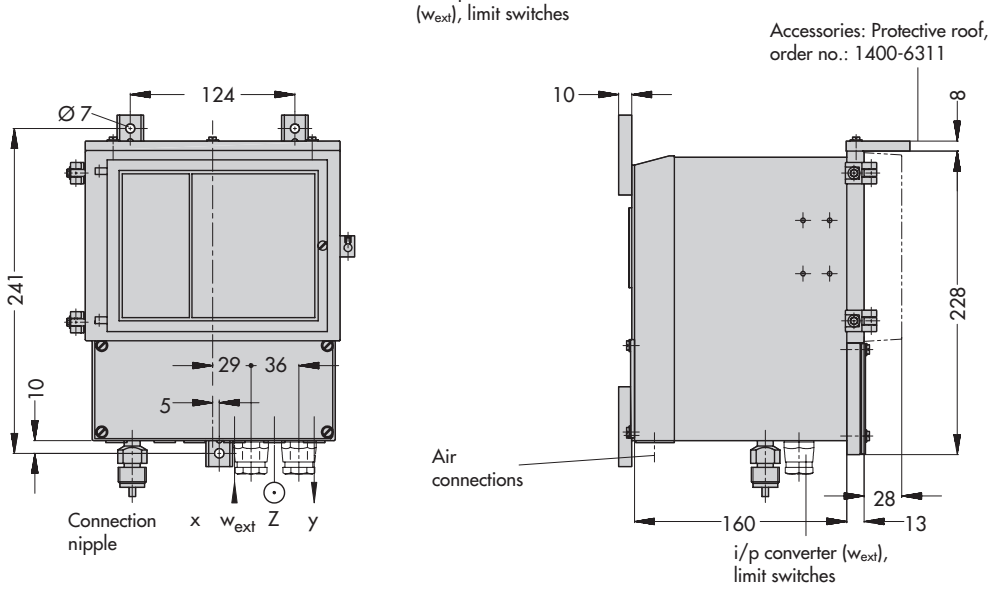

Fig. 6 · Dimensions

Specifications subject to change without notice.

SAMSON AG · MESS- UND REGELTECHNIK
Weismüllerstraße 3 · 60314 Frankfurt am Main · Germany
Phone: +49 69 4009-0 · Fax: +49 69 4009-1507
Internet: http://www.samson.de